COUNTY OF	ITEM NO.	SHEET NO.
CAMPBELL	6-40000	R1

TRANSPORTATION CABINET
DEPARTMENT OF HIGHWAYS

CAMPBELL COUNTY
KY 915 OVER SCAFFOLD CREEK
STA. 12+05.34

STANDARD DRAWINGS

RBR-005-11	GUARDRAIL COMPONENTS
RBR-010-06	GUARDRAIL TERMINAL SECTIONS
RBR-015-06	STEEL GUARDRAIL POSTS
RBR-016-05	TIMBER GUARDRAIL POSTS
RBR-020-07	GUARDRAIL END TREATMENT TYPE 1
RBR-051-01	GUARDRAIL END TREATMENT TYPE ALTERNATE ANCHOR
RBR-055-01	DELINEATORS FOR GUARDRAIL
RBI-001-12	TYPICAL GUARDRAIL INSTALLATIONS
RDI-040-01	EROSION CONTROL BLANKET SLOPE INSTALLATION
RDX-210-03	TEMPORARY SILT FENCE
RDX-220-05	SILT TRAP TYPE A
RDX-225-01	SILT TRAP TYPE B
RDX-230-01	SILT TRAP TYPE C
RGX-001-06	MISCELLANEOUS STANDARDS
RGX-200-01	ONE POINT PROCTOR FAMILY OF CURVES

ACTIVE SEPIAS

N/A	

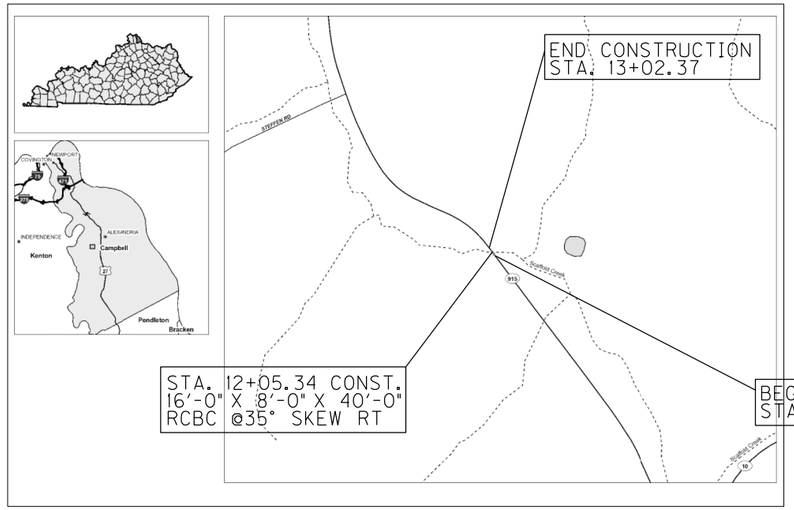

LOCATION MAP
SCALE: 1"=NTS

INDEX OF SHEETS

Sheet No.	Description
R1	LAYOUT SHEET
R2	TYPICAL SECTION, GENERAL SUMMARY, LEGEND AND COORDINATE CONTROL DATA
R3	PLAN AND PROFILE SHEET
R4	MOT PLAN - DETOUR NOTES
S1	TITLE
S2	LAYOUT
S3	BARREL DETAILS
S4	BARREL DETAILS
S5	WING 1
S6	WING 2
S7	WING 3
S8	WING 4
S9	BILL OF REINFORCEMENT
S10	BILL OF REINFORCEMENT
S11	SOUNDING LAYOUT

SPECIAL NOTES

EROSION CONTROL
BRIDGE OVERLAY APPROACH PAVEMENT

SPECIAL PROVISIONS

SPECIFICATIONS

2019, STANDARD SPECIFICATIONS FOR ROAD AND BRIDGE CONSTRUCTION

REVISION	DATE

DESIGN CRITERIA

CLASS OF HIGHWAY: RURAL MAJOR COLLECTOR
TYPE OF TERRAIN: ROLLING
DESIGN SPEED:
REQUIRED NPSD:
REQUIRED PSD:
LEVEL OF SERVICE:
ADT PRESENT (2021) 775
ADT FUTURE ( ):
DHV:
D %:
T %:

GEOGRAPHIC COORDINATES

LATITUDE 38 DEGREES 56 MINUTES 56 SECONDS NORTH
LONGITUDE 84 DEGREES 24 MINUTES 39 SECONDS WEST

DESIGNED

% RESTRICTED SD:
LEVEL OF SERVICE:
MAX. DISTANCE W/O PASSING:

BEFORE YOU DIG

The contractor is instructed to call 1-800-752-6007 to reach KY 811, the one-call system for information on the location of existing underground utilities. The call is to be placed a minimum of two (2) and no more than ten (10) business days prior to excavation. The contractor should be aware that owners of underground facilities are not required to be members of the KY 811 one-call Before-U-Dig (BUD) service. The contractor must coordinate excavation with the utility owners, including those whom do not subscribe to KY 811. It may be necessary for the contractor to contact the County Court Clerk to determine what utility companies have facilities in the area.

REV. NO.	SHEETS REVISED	DATE

STATE OF KENTUCKY
JARED R. McCAMMON
28688
LICENSED
PROFESSIONAL ENGINEER

Jared R. McCammon,
P.E. #28688

ROADWAY P.E. STAMP

EXISTING BRIDGE ID # 019B00088N

PREPARED BY
HDR ENGINEERING, INC.
2517 SIR BARTON WAY
LEXINGTON, KY 40509
859-629-4800

Commonwealth of Kentucky
DEPARTMENT OF HIGHWAYS
COUNTY OF
CAMPBELL

ITEM NO. 6-40000 (SPP D23A)
DRAWING NO.
PROJECT NUMBER:
LETTING DATE:

RECOMMENDED BY: PROJECT MANAGER DATE:
PLAN APPROVED BY: STATE HIGHWAY ENGINEER DATE:

FILE NAME: $DGNSPEC$
USER: $USER$
DATE PLOTTED: $DATE$ $TIME$
E-SHEET NAME:
MicroStation v8.11.9.919

COUNTY OF	ITEM NO.	SHEET NO.
CAMPBELL	6-40000	R2

CONVENTIONAL SIGNS

SURVEY LINE
GRADE LINE — 400' V.C.
GROUND LINE
COUNTY LINE
CORPORATE LIMITS
EXIST. PROPERTY LINE
EXIST. RIGHT OF WAY & PROPERTY LINE
PROPOSED RIGHT OF WAY
RIGHT OF WAY MONUMENT
BENCH MARK — B.M. NO.4
EXISTING R/W MARKER
RIGHT OF WAY MONUMENT EXISTING/PROPOSED
UTILITY TEST HOLE — TH
EXISTING ROAD
RAILROAD
FENCE (CONTROLLED ACCESS)
FENCE (EXCEPT STONE AND HEDGE)
TREE LINE
TREES
PIPE CULVERT
CULVERT
BRIDGE
BUILDINGS — 1-S FRAME, 1-S BRICK, SHED, 2-S BRICK
GUARDRAIL — END TREATMENT, GUARDRAIL, TERMINAL SECTION

	EXISTING	PROPOSED
LIGHTING POLE		
POWER POLE		
JOINT POWER & TELEPHONE POLE		
TELEPHONE & TELEGRAPH POLE		
ANCHOR, POWER OR TELEPHONE		
STUB POWER		
STUB TELEPHONE		
WATER MAIN	WM	6" WM
GAS MAIN	GM	6" GM
TELEPHONE DUCT	T	T
ELECTRIC DUCT	E	E
DIRECT BURIAL TV CABLE	TV	TV
SANITARY SEWER (WITH MANHOLE)	SAN	SAN
STORM SEWER (WITH MANHOLE)	STORM	STORM
DIRECT BURIAL ELECTRIC CABLE	E	E
DIRECT BURIAL TELEPHONE CABLE	T	T
OVERHEAD WIRE		
TRAFFIC LIGHTS		
ELECTRIC MANHOLE	EMH	EMH
TELEPHONE MANHOLE	TMH	TMH

STONE FENCE
HEDGE FENCE
SWAMP OR MARSH
SPRINGS
SINKHOLE
QUARRY SITE
BLUE LINE STREAM
INTERMITTENT STREAM OR DITCH
LAKES OR PONDS
REGULATED FLOODWAY
NORTH POINT

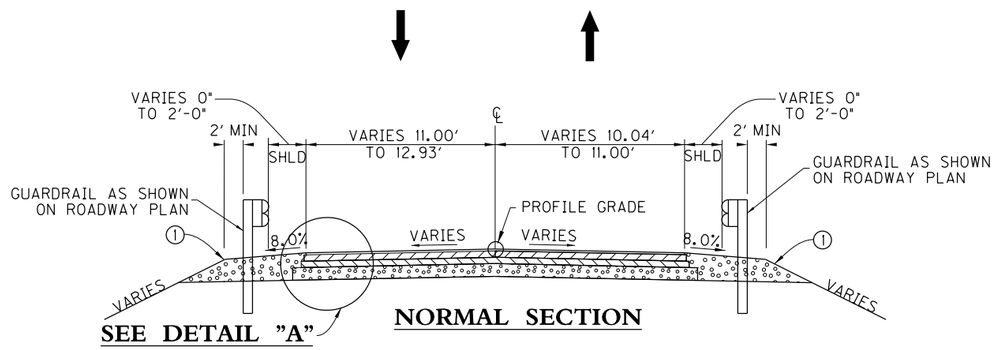

NORMAL SECTION

TRAFFIC LANE PAVEMENT ②

ASPHALT SURFACE	1.25" DEPTH CL. 2 ASPHALT SURFACE 0.38D PG64-22
ASPHALT BASE	8" DEPTH (4"+4") CL. 2 ASPHALT BASE 1.00D PG 64-22
DGA BASE	8" DEPTH (4"+4")

SHOULDERS

DGA BASE AND/OR GRANULAR EMBANKMENT	FULL DEPTH

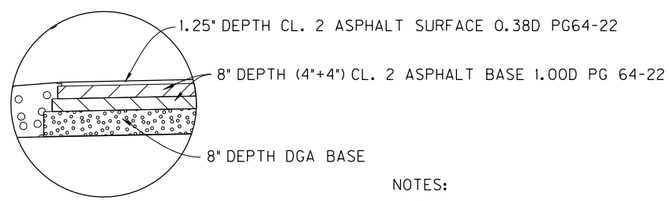

DETAIL "A"②

SEE CULVERT LAYOUT SHEET FOR CULVERT TYPICAL SECTION

BOX CULVERT SECTION

NOTES:

① APPROACH PAVEMENT WILL BE PLACED IN ACCORDANCE WITH THE SPECIAL NOTE FOR PLACING BRIDGE OVERLAY APPROACH PAVEMENT. DGA OR OTHER GRANULAR MATERIAL APPROVED BY THE ENGINEER NEEDED FOR SHOULDERS OUTSIDE OF PAVED AREAS WILL BE MEASURED AS GRANULAR EMBANKMENT. FULL DEPTH PAVEMENT ONLY REQUIRED FOR EXCAVATED AREAS FOR CONSTRUCTION, RE-ALIGNED ROADWAYS, AND WIDENED ROADWAYS. REMAINDER OF PAVEMENT AREAS SHALL BE OVERLAYED ONLY.

② THE PAVEMENT DEPTH WILL VARY ACROSS THE BOX CULVERT. THE MINIMUM PAVEMENT DEPTH WILL BE 4.5" OF ASPHALT ON THE LEFT SIDE AND INCREASE IN DEPTH GOING TO THE RIGHT. BUILD UP THE PAVEMENT PER THE PAVEMENT DESIGN UNTIL THE FULL SECTION IS ACHIEVED. ADDITIONAL FILL OVER THE CULVERT, IF NEEDED, IS TO BE PER KYTC SPECIFICATIONS.

ITEM	DESCRIPTION	UNIT	TOTAL
00001	DGA	TON	13
01204	PIPE CULVERT HEADWALL - 18 IN	EACH	1
01987	DELINEATOR FOR GUARDRAILL B/W	EACH	6
02351	GUARDRAIL-STEEL W BEAM-S FACE	LF	175
02360	GUARDRAIL TERMINAL SECTION NO 1	EACH	2
02367	GUARDRAIL END TREATMENT TYPE 1	EACH	2
02484	CHANNEL LINING CLASS III	TON	72
02562	TEMPORARY SIGNS Ⓐ	SQFT	180
02569	DEMOBILIZATION	LS	1
02585	EDGE KEY	LF	46
02650	MAINTAIN AND CONTROL TRAFFIC Ⓑ	LS	1
02726	STAKING	LS	1
02731	REMOVE STRUCTURE	LS	1
03304	BRIDGE OVERLAY APPROACH PAVEMENT	SQYD	321
21415ND	EROSION CONTROL Ⓒ	LS	1

NOTES:

Ⓐ THIS ITEM INCLUDES ALL TEMPORARY SIGNS USED FOR ROAD CLOSURE AND DETOUR ROUTE.
Ⓑ ALL TEMPORARY TRAFFIC CONTROL DEVICES EXCEPT TEMPORARY SIGNAGE ARE CONSIDERED INCIDENTAL TO THIS BID ITEM.
Ⓒ SEE SPECIAL NOTE. INCLUDES ALL CLEARING, TEMPORARY EROSION CONTROL BMPS AND PERMANENT SEEDING.

KY 915
CAMPBELL COUNTY
EXISTING BRIDGE ID #019B00088N

PROJECT COORDINATES
COORDINATES FOR HORIZONTAL CONTROL WERE OBTAINED BY GPS OBSERVATIONS ON SEPTEMBER 13, 2022 AND WERE ADJUSTED TO NGS OPUS SOLUTION BASED ON THE NAD83 KENTUCKY STATE PLANE COORDINATE SYSTEM, KY SINGLE ZONE, US SURVEY FEET. COORDINATES SHOWN ARE STATE PLANE COORDINATES, US SURVEY FEET. NO PROJECT DATUM FACTOR WAS CALCULATED OR USED FOR THIS PROJECT.

BASIS OF ELEVATIONS
ELEVATIONS WERE ESTABLISHED BY GPS OBSERVATIONS ON SEPTEMBER 13, 2022 ON THE NAVD88 VERTICAL DATUM, GEOID18 UTILIZING NGS OPUS SOLUTION AND WERE ADJUSTED BY CLOSED DIFFERENTIAL LEVEL LOOP BASED ON THE ELEVATION OF CP #1 = 623.57'.

COORDINATE CONTROL POINTS

POINT	DESCRIPTION	STATE PLANE SINGLE ZONE COORDINATES			STATION	OFFSET
		NORTH (Y)	EAST (X)	ELEV. (Z)		
CP 1	5/8" REBAR & CAP	4235866.6870	5302276.2790	623.57	10+00.38	13.78' RT.
CP 2	5/8" REBAR & CAP	4235949.0857	5302215.8258	616.24	11+02.57	15.05' RT.
CP 3	5/8" REBAR & CAP	4235991.1400	5302128.6190	612.80	11+88.62	29.32' LT.
CP 4	5/8" REBAR & CAP	4236039.0600	5302171.0510	610.18	12+01.38	33.40' RT
CP 5	5/8" REBAR & CAP	4236111.9880	5302085.5330	609.01	13+09.52	13.37' RT.

CENTERLINE COORDINATE DATA

POINT	STATION	STATE PLANE SINGLE ZONE COORDINATES	
		NORTH (Y)	EAST (X)
P.O.B.	10+00.00	4235858.0899	5302265.4996
P.C.	12+43.82	4236052.8767	5302118.8441
P.I.	13+66.58	4236150.9438	5302045.0091
P.T.	14+84.57	4236203.6675	5301934.1536
P.O.E.	15+22.41	4236219.9198	5301899.9820

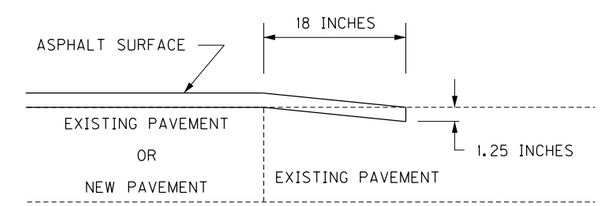

EDGE KEY DETAIL

WORK UNDER THIS ITEM SHALL INCLUDE CUTTING OUT THE EXISTING BITUMINOUS SURFACE TO A MINIMUM DEPTH AND WIDTH AS SHOWN, SO THE NEW SURFACE MAY HEEL INTO THE EXISTING SURFACE.

SCALE: 1"=NTS

TYPICAL SECTION, GENERAL SUMMARY, LEGEND AND COORD. CONTROL SHEET
KY 915 OVER SCAFFOLD CREEK

FILE NAME: C:\PWWORKING\EAST01\D2823099\019B00088N_R002.DGN
USER: JMCCAMMO
DATE PLOTTED: March 10, 2023
E-SHEET NAME:
MicroStation v8.11.9.919

COUNTY OF	ITEM NO.	SHEET NO.
CAMPBELL	6-40000	R3

STA. 12+00 LT REMOVE 10 LF OF EXISTING 18" PIPE AND HEADWALL. STA. 11+92 26' LT CONSTRUCT 1-18" SLOPED AND FLARED HEADWALL.

P.I. 13+66.58
D = 27°35'16" LT.
C = 11°27'33"
T = 122.75'
L = 240.75'
R= 500.00'
E = 14.85'

EXISTING MAILBOXES TO BE RELOCATED BEHIND GUARDRAIL

PLACE 40 TONS OF CHANNEL LINING CL III AT CULVERT INLET

END CONSTRUCTION STA. 13+02.16

BEGIN PAVEMENT STA. 11+50.00

BEGIN CONSTRUCTION STA. 10+88.62

END PAVING STA. 12+80.00

DISTURB LIMITS TO REMAIN

OVERHEAD UTILITY PROTECT IN PLACE

STA. 11+50.00 CONSTRUCT 24 LF OF EDGE KEY

STA. 12+80.00 CONSTRUCT 22 LF OF EDGE KEY

PLACE 32 TONS OF CHANNEL LINING CL III AT CULVERT OUTLET

STA. 12+04 REMOVE EXISTING BRIDGE

STA. 12+40 RT. CRUSHED STONE ENTRANCE MAY BE SHIFTED DURING CONSTRUCTION. COORDINATE WITH THE ENGINEER. FINAL LOCATION TO BE AS SHOWN WITH A MINIMUM OF 6" DENSE GRADED AGGREGATE.

GUARDRAIL CONSTRUCTION				
STATION TO STATION	LOC.	SINGLE FACE A	SINGLE FACE	END TREATMENT
11+76 - 13+02	LT.	-	75	TERM. SEC. 1
				TYPE 1
10+89 - 12+26	RT.	-	100	TYPE 1
				TERM. SEC. 1

ATTACH GUARDRAIL TO CULVERT TOP SLOPE FOLLOWING STANDARD DRAWING RBR-015

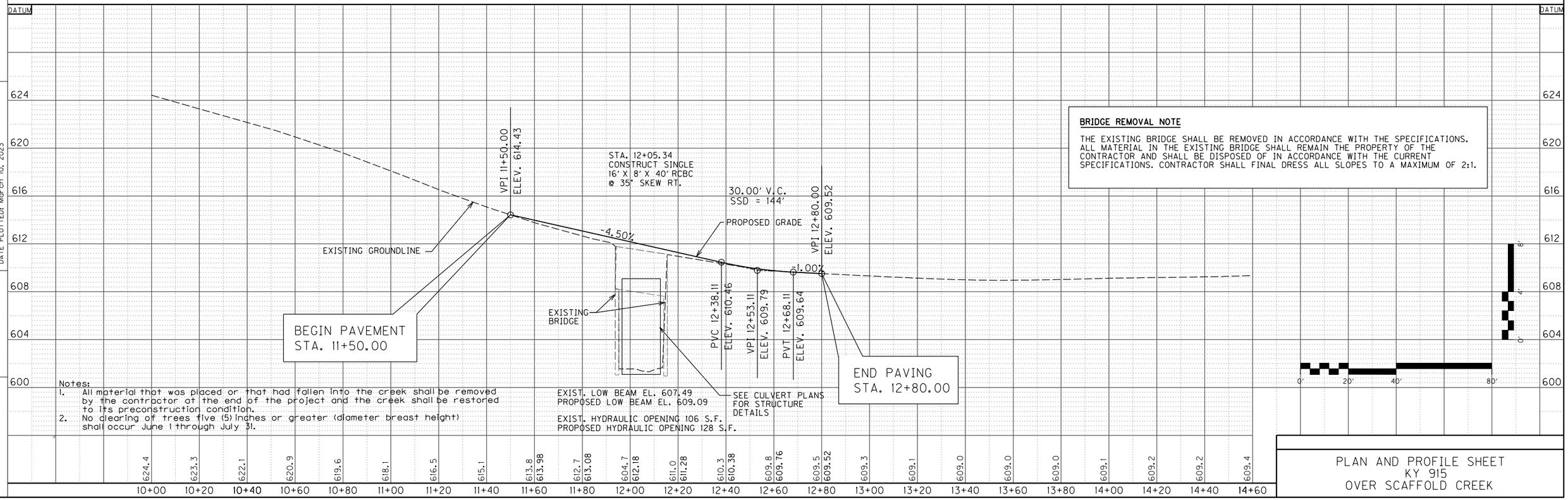

Notes:
1. All material that was placed or that had fallen into the creek shall be removed by the contractor at the end of the project and the creek shall be restored to its preconstruction condition.
2. No clearing of trees five (5) inches or greater (diameter breast height) shall occur June 1 through July 31.

PLAN AND PROFILE SHEET
KY 915
OVER SCAFFOLD CREEK

FILE NAME: C:\PWWORKING\EAST01\D2823099\01980008N_R003.DGN
USER: AUECKER
DATE PLOTTED: March 10, 2023
E-SHEET NAME:
MicroStation v8.11.9.919

COUNTY OF	ITEM NO.	SHEET NO.
CAMPBELL	6-40000	R4

FOR MAINTENANCE OF TRAFFIC ONLY

MAINTENANCE OF TRAFFIC NOTES:

1. CONTRACTOR SHALL INVENTORY, REMOVE AND REPLACE EXISTING SIGNS, WITH NEW SIGNS IMPACTED BY THE PROPOSED CONSTRUCTION. OFFSITE SIGNS CONFLICTING WITH THE PROPOSED IMPROVEMENTS SHALL BE REMOVED AND REPLACED AT THE DIRECTION OF KYTC.
2. CONTRACTOR SHALL COORDINATE WITH LOCAL RESIDENTS AND OFFICIALS PRIOR TO CONSTRUCTION AND ANY TEMPORARY CLOSURES.
3. INGRESS AND EGRESS SHALL BE MAINTAINED TO ALL DWELLINGS AFFECTED BY THE PROJECT.
4. CLOSURE SIGNS, DETOUR SIGNS AND BI-DIRECTIONAL LANE CLOSURE SIGNS SHOULD BE PLACED NO SOONER THAN TWO WEEKS PRIOR TO THE CLOSING OF THE BRIDGE (WHEN APPLICABLE) OR PLACING LANE CLOSURES.
5. TRAFFIC CONTROL SIGNS AND DEVICES SHALL BE INSTALLED AND MAINTAINED IN ACCORDANCE WITH THE MANUAL ON UNIFORM TRAFFIC CONTROL DEVICES, THE 2019 KYTC STANDARD SPECIFICATIONS FOR ROAD AND BRIDGE CONSTRUCTION, AND THE KYTC STANDARD DRAWINGS.
6. CONTRARY TO SECTION 106.01, TRAFFIC CONTROL DEVICES USED ON THIS PROJECT MAY BE NEW OR USED IN NEW CONDITION, AT THE BEGINNING OF THE WORK AND MAINTAINED IN LIKE NEW CONDITION UNTIL COMPLETION OF WORK.
7. TRAFFIC CONTROL DEVICES SHALL BE PLACED AND MAINTAINED IN THE WORK ZONE IN A MANNER THAT ENSURES THERE IS NO RESTRICTION TO THE VISIBILITY OF APPROACHING TRAFFIC.
8. SIGNS NOT APPLICABLE TO CURRENT PHASE OF CONSTRUCTION SHALL BE REMOVED OR COVERED IF LEFT IN PLACE.
9. TEMPORARY CLOSURES AND FLAGGERS SHALL BE UTILIZED AS NECESSARY.
10. EXISTING KY 915 BRIDGE AND ROAD SHALL BE CLOSED AND TRAFFIC DIVERTED AND MAINTAINED ON THE TEMPORARY DETOUR DURING CONSTRUCTION OF THE PROPOSED BRIDGE AND ROADWAY.
11. BARRICADES SHALL BE TYPE III BARRICADES IN CONFORMANCE WITH MANUAL ON UNIFORM TRAFFIC CONTROL DEVICES (MUTCD). SECTION 6F.68 ADDRESSES TEMPORARY BARRICADES. MINIMUM LENGTH OF TYPE III BARRICADE WILL BE 48", UTILIZE ENOUGH DEVICES OF SUFFICIENT LENGTH TO ADEQUATELY BLOCK ROAD USERS FROM EDGE OF ROAD TO EDGE OF ROAD OR CURB TO CURB. IF PROVISIONS HAVE BEEN MADE FOR ACCESS OF AUTHORIZED EQUIPMENT AND VEHICLES THE DBT PROJECT TRAFFIC COORDINATOR, OR DESIGNATED REPRESENTATIVE, SHALL ENSURE THAT PROPER CLOSURE OF THE ROADWAY IS OBTAINED AT THE END OF EACH WORKDAY.

MAINTENANCE OF TRAFFIC PHASING:

PHASE 1:

1. INSTALL AND MAINTAIN TRAFFIC CONTROL SIGNS AND DEVICES IN ACCORDANCE WITH THE MANUAL ON UNIFORM TRAFFIC CONTROL DEVICES TYPICAL APPLICATION 8, FIGURE 6H-8 AND PER THE MAINTENANCE OF TRAFFIC PLANS.
2. INSTALL AND MAINTAIN TEMPORARY TRAFFIC CONTROL SIGNS AND DEVICES PER KYTC STANDARD DRAWING TTC-110-03 ALONG KY 915.
3. TYPE III BARRICADES WITH SIGN R11-2 ATTACHED SHALL BE OF SUFFICIENT LENGTH TO CLOSE THE ENTIRE ROADWAY.
4. CLOSE THE EXISTING KY 915 BRIDGE AND ROADWAY AND DIVERT TRAFFIC TO THE TEMPORARY DETOUR AS PER THE MAINTENANCE OF TRAFFIC PLAN.

PHASE 2:

1. REMOVE THE EXISTING KY 915 BRIDGE AND ROADWAY
2. CONSTRUCT PROPOSED KY 915 BRIDGE AND ROADWAY
3. INSTALL PERMANENT SIGNS ALONG NEW ROADWAY AND REQUIRED PAVEMENT MARKINGS

PHASE 3:

1. REMOVE ALL TEMPORARY MAINTENANCE OF TRAFFIC DEVICES AND SIGNS AND TEMPORARY DETOUR SIGNS
2. ROUTE TRAFFIC TO THE PROPOSED KY 915 BRIDGE AND ROADWAY

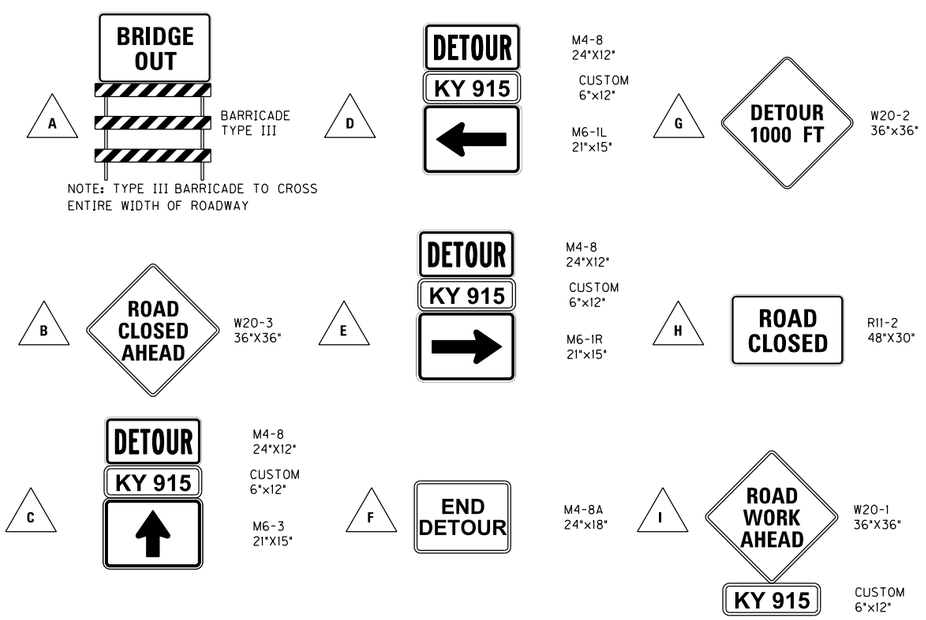

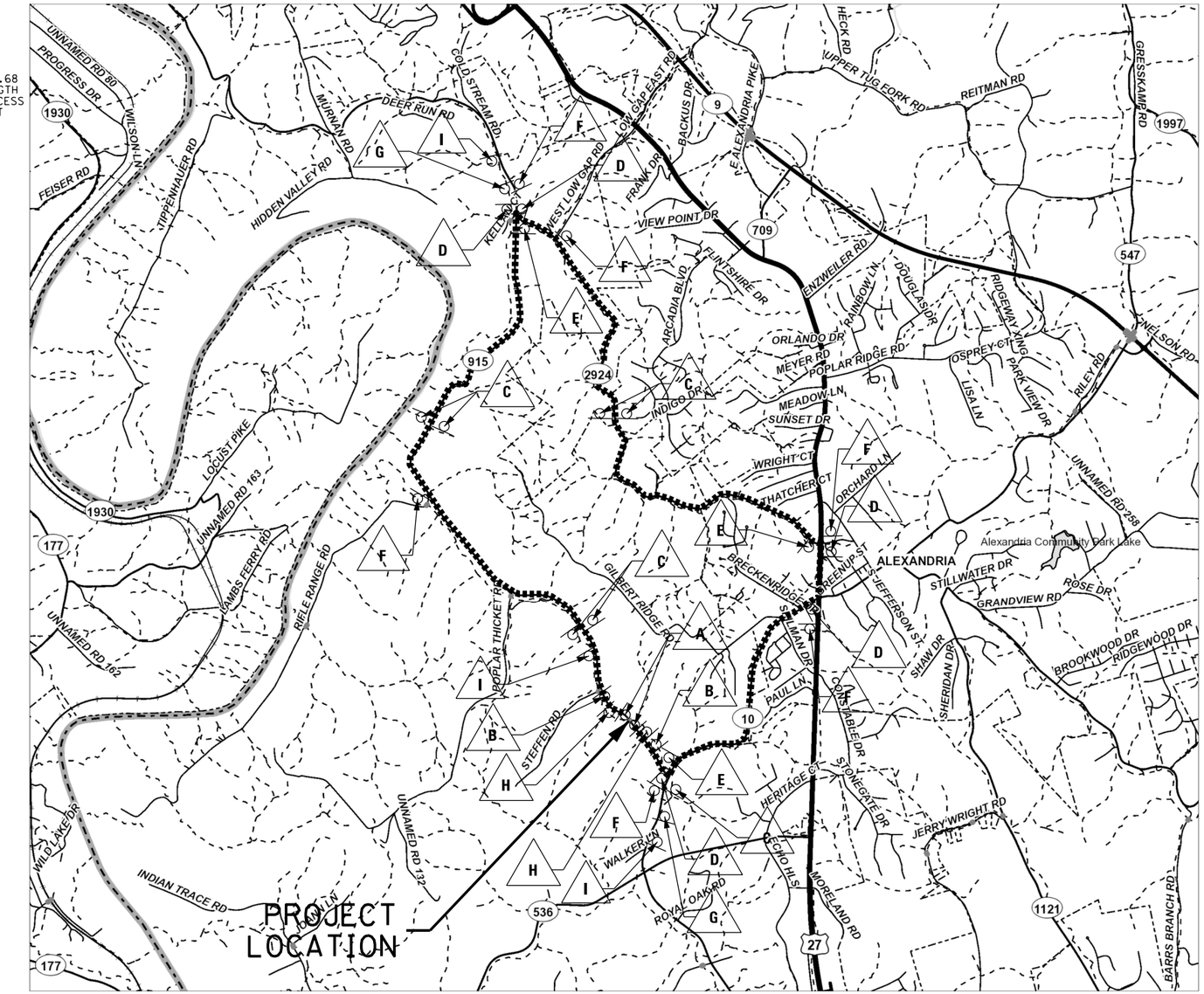

DETOUR LENGTH = 7.9 MILES

NOT TO SCALE

DETOUR ROUTE

MOT PLAN - DETOUR
KY 915 OVER
SCAFFOLD CREEK

FILE NAME: C:\PWWORKING\EAST01\D2823099\01980008N_R005.DGN
USER: AUECKER
DATE PLOTTED: March 10, 2023
E-SHEET NAME:
MicroStation v8.11.9.919

TRANSPORTATION CABINET
DEPARTMENT OF HIGHWAYS

CAMPBELL COUNTY
KY 915
KY 915 OVER SCAFFOLD CREEK
Station 12+05.34

INDEX OF SHEETS

Sheet No.	Description
1	Title
2	Layout
3 & 4	Barrel Details
5	Wing 1
6	Wing 2
7	Wing 3
8	Wing 4
9 & 10	Bill of Reinforcement
11	Sounding Layout

SPECIAL NOTES

Special Note for One-Step Membrane

SPECIAL PROVISIONS

STANDARD DRAWINGS

BGX-006-10	Stencils for Structures
BGX-012-02	Geotechnical Legend
RBR -015- 04	Guardrail Posts

SPECIFICATIONS

2019 Standard Specifications for Road and Bridge Construction.

2020 AASHTO LRFD Bridge Design Specifications, 9th Ed.

GENERAL NOTES

SPECIFICATIONS: All references to the standard Specifications are to the current edition of the Kentucky Department of Highways Standard Specifications for Road and Bridge Construction with current Supplemental Specifications. All references to the AASHTO are to the current edition of the AASHTO LRFD Bridge Design Specifications, with interims.

DESIGN LOAD: This structure is designed for HL-93 live load increased by 25%. The 25% increase is arrived by increasing the design truck or tandem and the design lane load by 25%.

DESIGN METHOD: All reinforced concrete members are designed by the load and resistance factor method as specified in the current AASHTO Specifications.

MASONRY COATING: Masonry coating will not be required for this structure.

COMPLETION OF THE STRUCTURE: The Contractor is required to complete the structure in accordance with the plans and specifications. Material, labor or construction operations, not otherwise specified, are to be included in the bid item most appropiate to the work involved. This may include cofferdams, shoring, excavatuions, backfilling, removal of all or parts of existing structures, phase construction, incidental materials, labor, or anything else required to complete the structure.

REINFORCEMENT: Dimensions shown from the face of concrete to bars are to center of bars unless otherwise shown. Spacing of bars is from center to center of bars. Clear distance to face of concrete is 2" unless otherwise noted. Any reinforcing bars designated by suffix (e) in the Plans shall be epoxy coated in accordance with section 811.10 of the Standard Specifications. Any reinforcing bars designated by suffix (s) in a Bill of Reinforcement shall be considered a stirrup for purposes of bend diameters.

BEVELED EDGES: All exposed edges shall be beveled ¾" unless otherwise shown.

DIMENSIONS: Dimensions are for a normal temperature of 60 degrees Fahrenheit. Layout dimensions are horizontal measurements.

WEIGHT OF FILL MATERIAL: The assumed weight of fill material is 120 lbs per cubic foot.

CONCRETE: Class "A" concrete shall be used throughout.

CONSTRUCTION JOINTS: Vertical construction joints shall be located in the field, except that no construction joint shall be located in the barrel within six feet of the ends of the culvert.

FOOTING PRESSURE: Foundation materials for wing footings required to resist a maximum bearing pressure of 1986 PSF.

FLOWLINE REINFORCEMENT: Reinforcement in the 6 in thick slab shall be Size 4 bars at 18 in centers in each direction or an equivalent area of welded deformed steel fabric. The bars shall extend a minimum of 12 in into wing footings and/or the bottom slab. The cost of this reinforcement shall be incidental to the unit price bid for Concrete, Class "A".

ESTIMATE OF QUANTITIES

BID CODE	ITEM	QUANTITY	UNIT
8100	Class "A" Concrete	151.8	C.Y.
8150	Reinforcement	12811	Lb
8003	Foundation Preparation	1	L.S.
8002	Structure Excavation Solid Rock	120	C.Y.
3250	Waterproofing Membrane	83	S.Y.
8151	Steel Reinforcement, Epoxy Coated	8806	Lb

CONSTRUCTION NOTES: Temporary sheeting, shoring, cofferdams, and/ or dewatering methods may be necessary for construction of the culvert. Include all costs in the price bid for Foundation Preparation.

ROCK EXCAVATION: Solid Rock Excavation will be required for the construction of this culvert.

YIELDING FOUNDATION: Rock and boulders within 2 ft of the design flowline must be excavated and backfilled with properly compacted soil to the base of the slab. Payment for this work shall be included in the lump sum bid for Foundation Preparation.

COMMONWEALTH OF KENTUCKY
DEPARTMENT OF HIGHWAYS

KENTUCKY TRANSPORTATION CABINET

REVISION	DATE

PREPARED BY
Division of Structural Design

DATE: FEB. 2023	CHECKED BY
DESIGNED BY: J. VAN ZEE	S.T. ANDARDS
DETAILED BY: M. BAWITHAWNG	J. VAN ZEE

SINGLE 16.0 x 8.0 CULVERT

CROSSING: SCAFFOLD CREEK

ROUTE	ITEM NO.	COUNTY OF
KY 915	N/A	CAMPBELL
	SHEET NO.	DRAWING NUMBER
	S1	28705

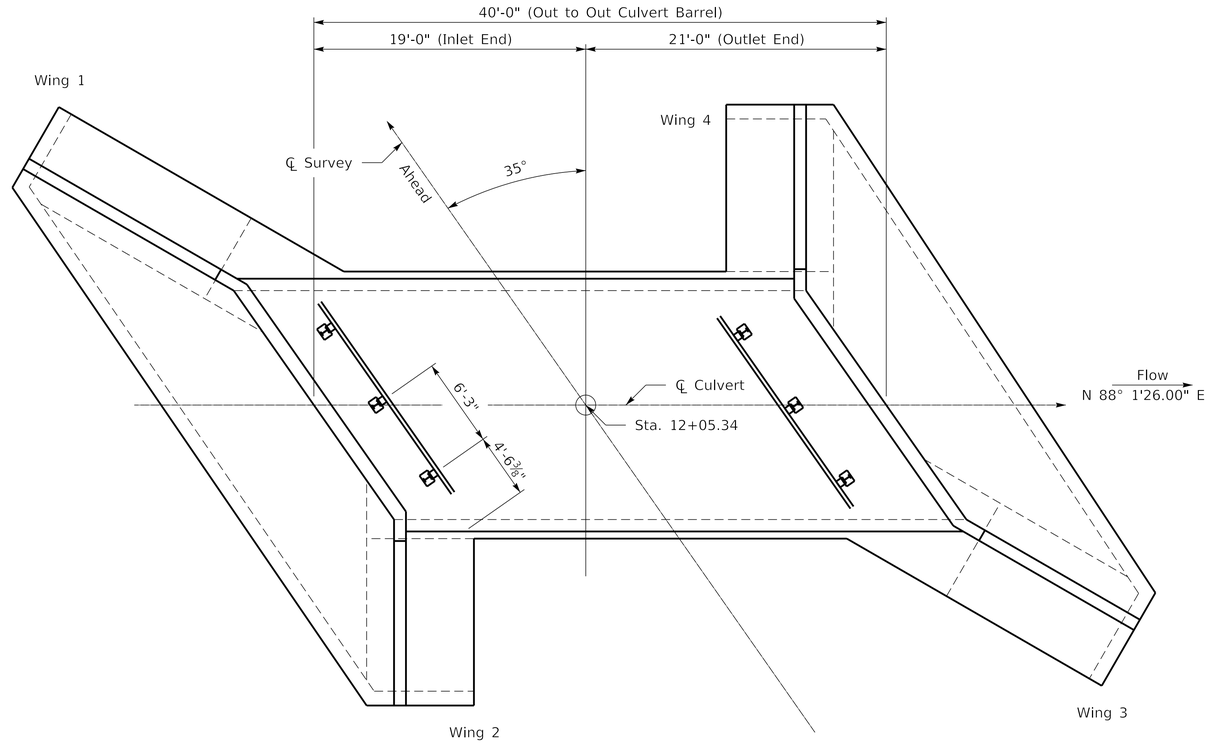

PLAN

SCALE = 1:60

Note: For Guardrail Location, see Roadway Plans.

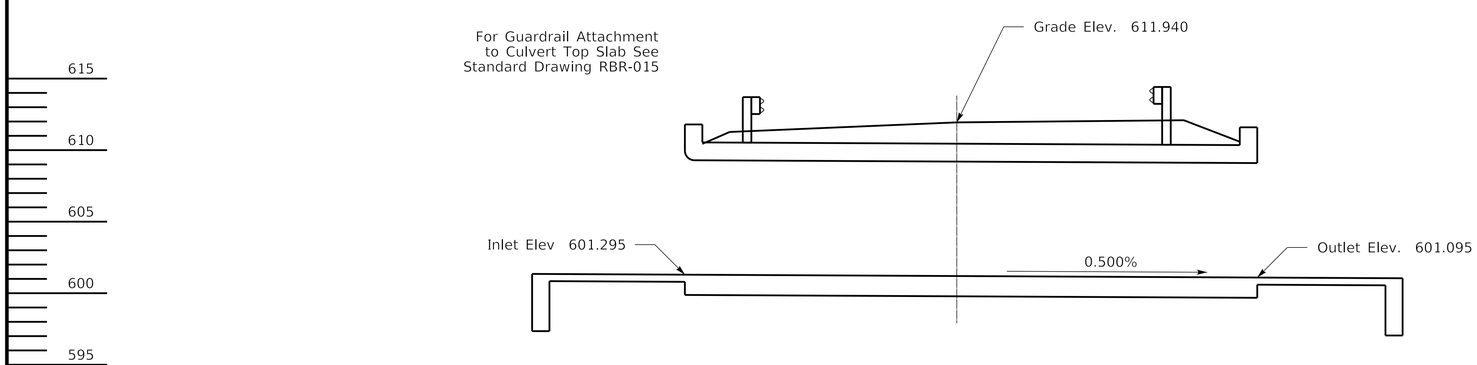

SECTION ON ℄

Single 16'-0" x 8'-0" x 40'-0" R.C.B.C.
19'-0" Inlet End and 21'-0" Outlet End
35° Rt. Skew ~ KYHL-93 Loading ~ 1:2 Fill Slope
Yielding Foundation

COMMONWEALTH OF KENTUCKY DEPARTMENT OF HIGHWAYS	REVISION	DATE	PREPARED BY Division of Structural Design	DATE: FEB. 2023	CHECKED BY	LAYOUT	ROUTE	ITEM NO. N/A	COUNTY OF CAMPBELL
				DESIGNED BY: J. VAN ZEE	S.T. ANDARDS	CROSSING	KY 915	SHEET NO. S2	DRAWING NUMBER 28705
				DETAILED BY: M. BAWITHAWNG	J. VAN ZEE	SCAFFOLD CREEK			

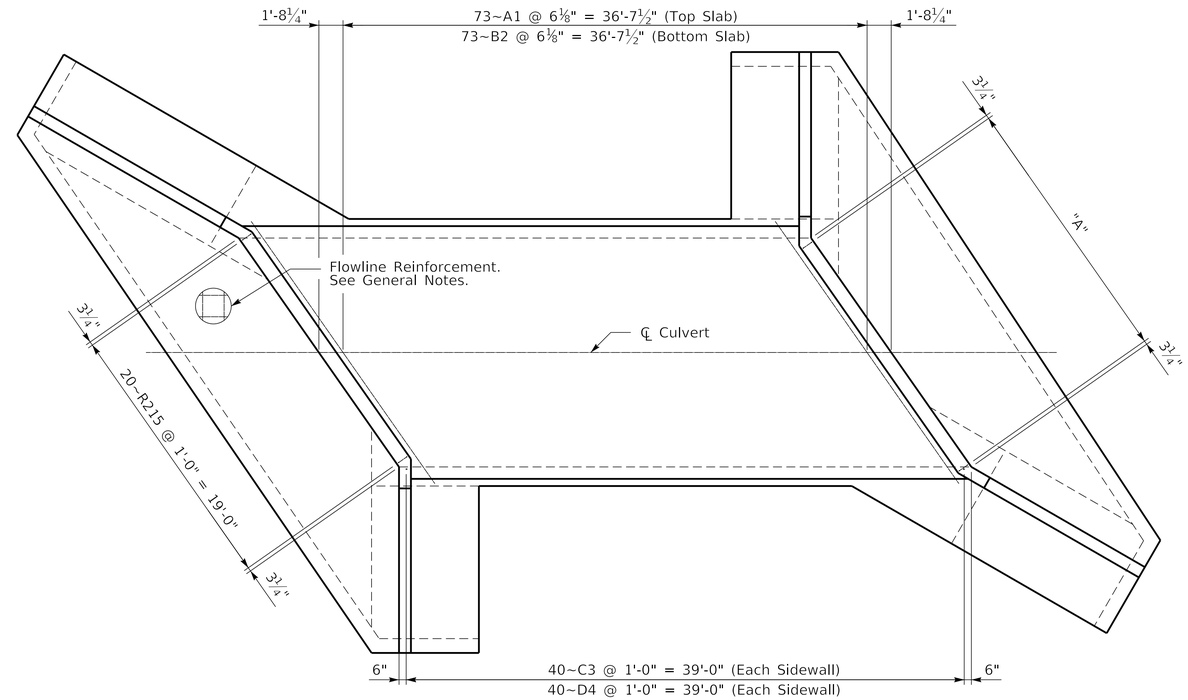

PLAN

SCALE = 1:60

"A" 20~R216 @ 1'-0" = 19'-0"
Minimum Lap Distance for E 9 Bars 26 in
Minimum Lap Distance for E 10 Bars 21 in

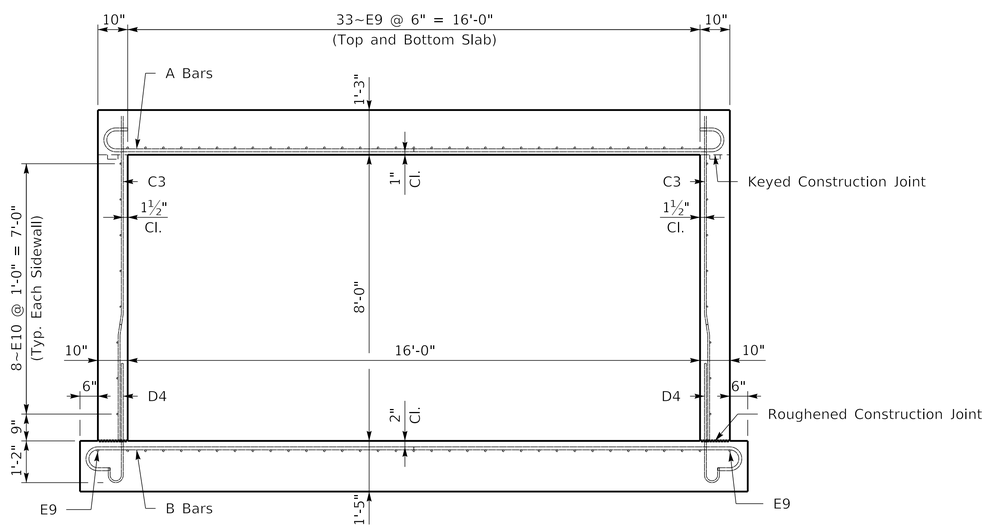

TYPICAL BARREL SECTION

SCALE = 1:24

COMMONWEALTH OF KENTUCKY
DEPARTMENT OF HIGHWAYS

KENTUCKY TRANSPORTATION CABINET

REVISION	DATE

PREPARED BY
Division of Structural Design

DATE: FEB. 2023	CHECKED BY
DESIGNED BY: J. VAN ZEE	S.T. ANDARDS
DETAILED BY: M. BAWITHAWNG	J. VAN ZEE

BARREL

CROSSING
SCAFFOLD CREEK

ROUTE	ITEM NO.	COUNTY OF
KY 915	N/A	CAMPBELL
	SHEET NO.	DRAWING NUMBER
	S3	28705

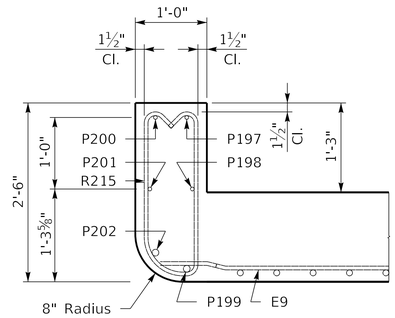

LEFT PARAPET
SCALE = 1:12
(Perpendicular to Parapet)

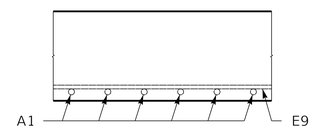

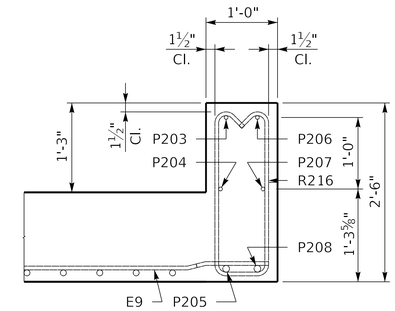

RIGHT PARAPET
SCALE = 1:12
(Perpendicular to Parapet)

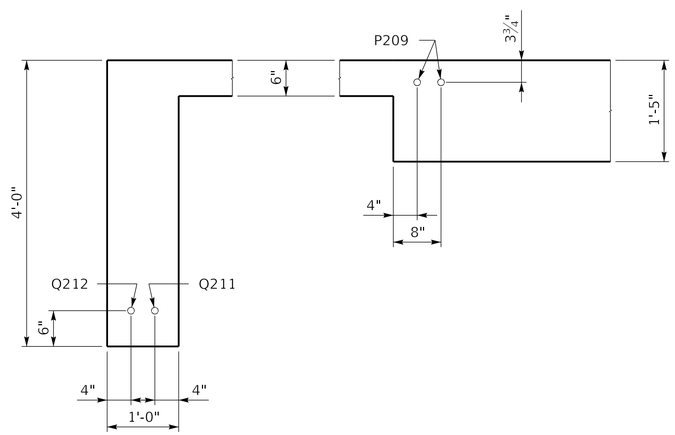

LEFT END
SCALE = 1:12
(Perpendicular to Apron)

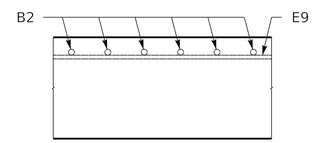

SECTION ON ℄
SCALE = 1:12

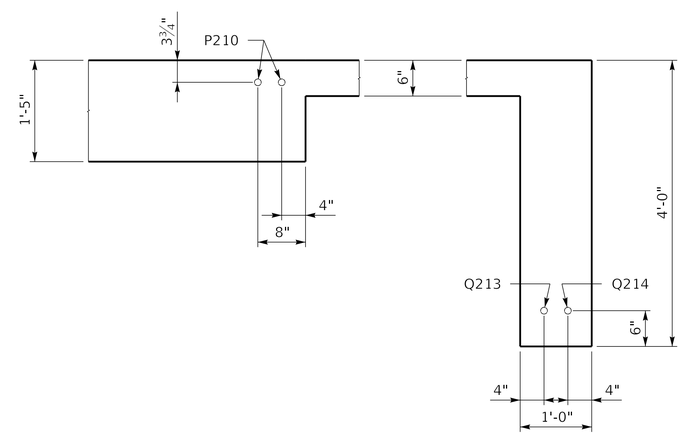

RIGHT END
SCALE = 1:12
(Perpendicular to Apron)

COMMONWEALTH OF KENTUCKY
DEPARTMENT OF HIGHWAYS
KENTUCKY TRANSPORTATION CABINET

REVISION	DATE

PREPARED BY
Division of Structural Design

DATE: FEB. 2023	CHECKED BY
DESIGNED BY: J. VAN ZEE	S.T. ANDARDS
DETAILED BY: M. BAWITHAWNG	J. VAN ZEE

BARREL	ROUTE	ITEM NO.	COUNTY OF
CROSSING: SCAFFOLD CREEK	KY 915	N/A	CAMPBELL
		SHEET NO. S4	DRAWING NUMBER 28705

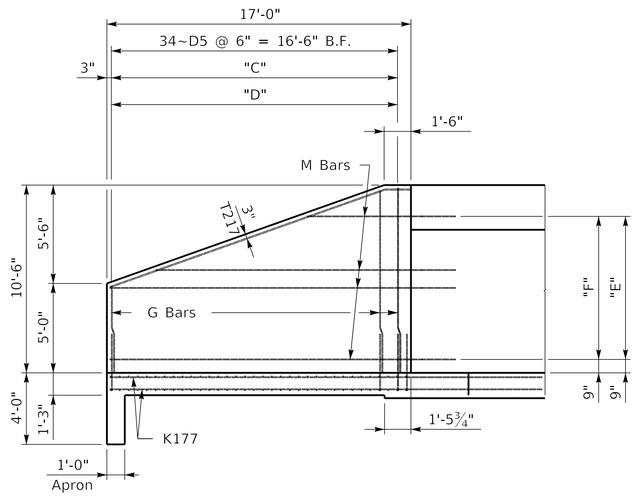

WING ELEVATION
SCALE = 1:48

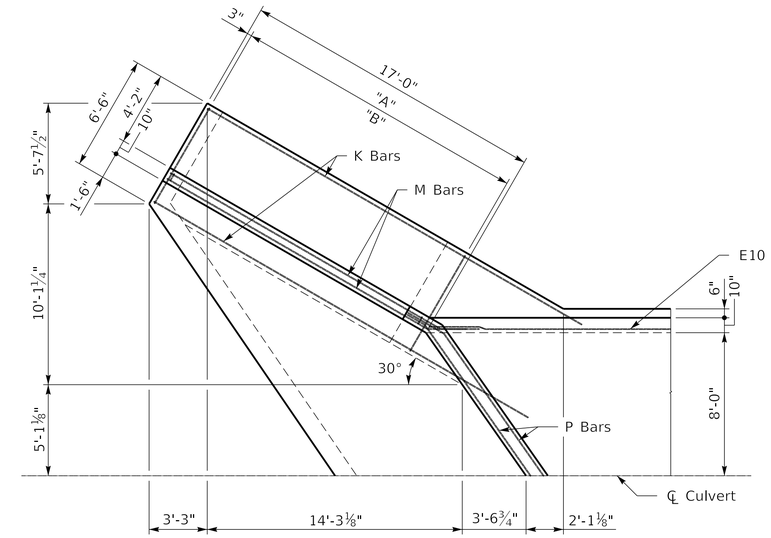

PLAN
SCALE = 1:48

"A" 34~H169 @ 6" = 16'-6" Top of Ftg.
"B" 34~H173 @ 6" = 16'-6" Bot of Ftg.
"C" G11~G27 @ 1'-0" = 16'-0" B.F.
"D" G112~G128 @ 1'-0" = 16'-0" F.F.
"E" 5~M181,M182~M185 @ 1'-0" = 8'-0" B.F.
"F" 5~M189,M190~M193 @ 1'-0" = 8'-0" F.F.
"G" 7~K177 @ 1'-0" = 6'-0" Bot of Ftg.
"H" 7~K177 @ 1'-0" = 6'-0" Top of Ftg.

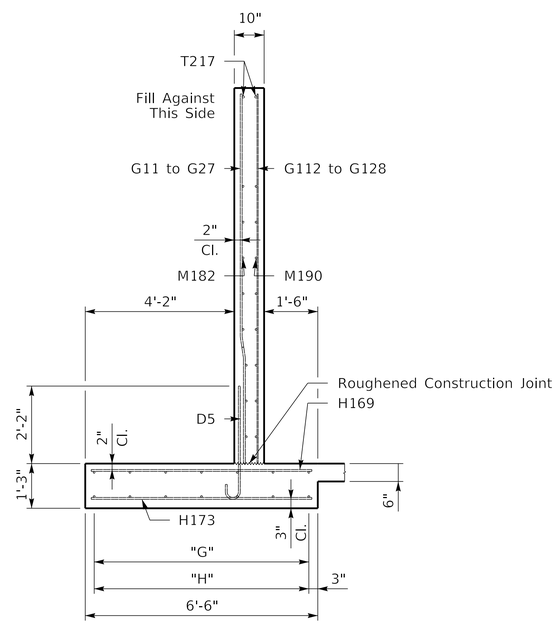

WING SECTION
SCALE = 1:24

COMMONWEALTH OF KENTUCKY
DEPARTMENT OF HIGHWAYS
KENTUCKY TRANSPORTATION CABINET

REVISION	DATE

PREPARED BY
Division of Structural Design

DATE: FEB. 2023	CHECKED BY
DESIGNED BY: J. VAN ZEE	S.T. ANDARDS
DETAILED BY: M. BAWITHAWNG	J. VAN ZEE

WING 1
CROSSING
SCAFFOLD CREEK

ROUTE	ITEM NO.	COUNTY OF
KY 915	N/A	CAMPBELL
	SHEET NO.	DRAWING NUMBER
	S5	28705

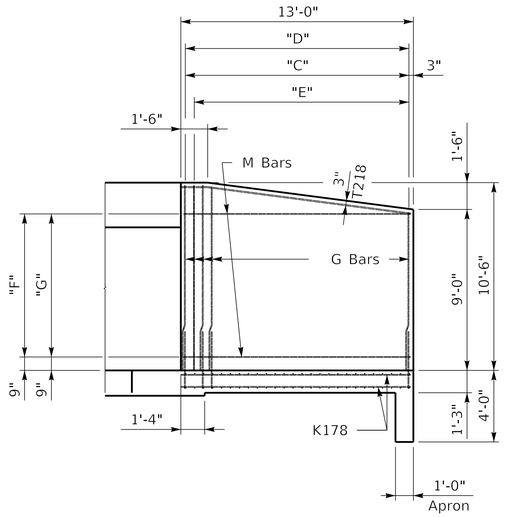

WING ELEVATION
SCALE = 1:48

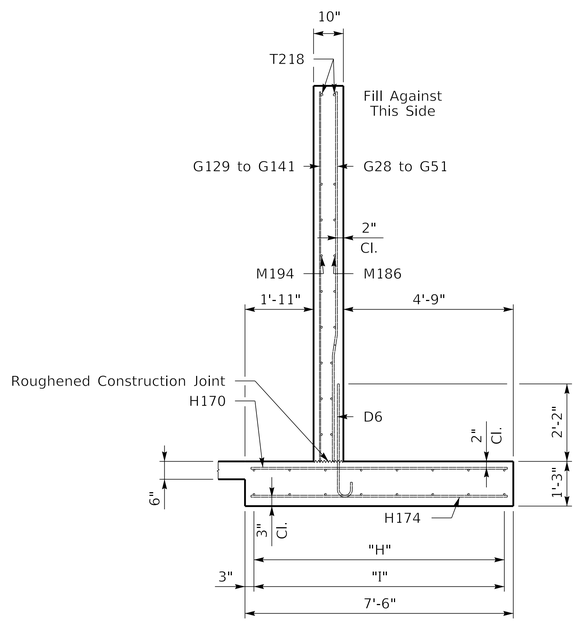

WING SECTION
SCALE = 1:24

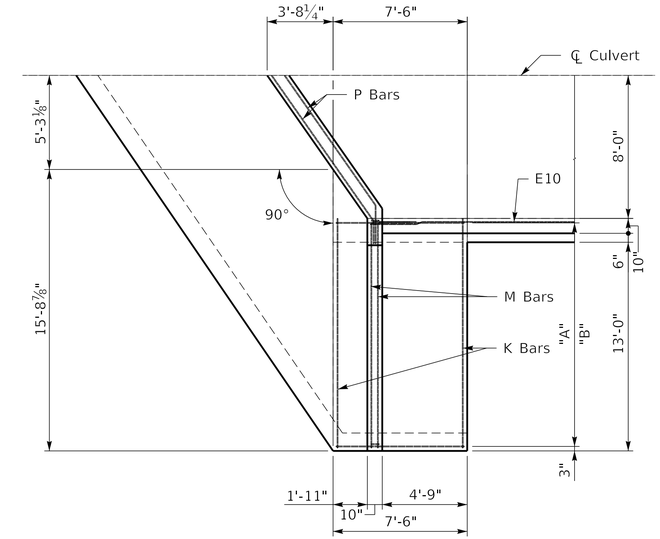

PLAN
SCALE = 1:48

"A" 26~H170 @ 6" = 12'-6" Top of Ftg.
"B" 26~H174 @ 6" = 12'-6" Bot of Ftg.
"C" 3~G51,G50~G28 @ 6" = 12'-6" B.F.
"D" 26~D6 @ 6" = 12'-6" B.F.
"E" G141~G129 @ 1'-0" = 12'-0" F.F.
"F" 9~M186 @ 1'-0" = 8'-0" B.F.
"G" 9~M194 @ 1'-0" = 8'-0" F.F.
"H" 8~K178 @ 1'-0" = 7'-0" Bot of Ftg.
"I" 8~K178 @ 1'-0" = 7'-0" Top of Ftg.

COMMONWEALTH OF KENTUCKY
DEPARTMENT OF HIGHWAYS
KENTUCKY TRANSPORTATION CABINET

REVISION	DATE

PREPARED BY
Division of Structural Design

DATE: FEB. 2023	CHECKED BY
DESIGNED BY: J. VAN ZEE	S.T. ANDARDS
DETAILED BY: M. BAWITHAWNG	J. VAN ZEE

WING 2
CROSSING: SCAFFOLD CREEK

ROUTE	ITEM NO.	COUNTY OF
KY 915	N/A	CAMPBELL
	SHEET NO.	DRAWING NUMBER
	S6	28705

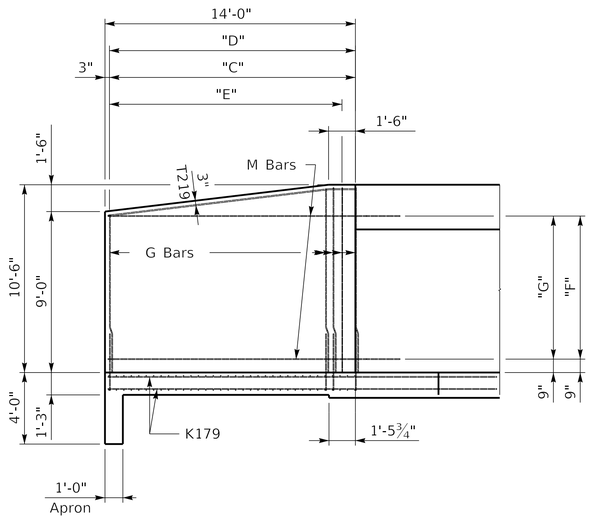

WING ELEVATION

SCALE = 1:48

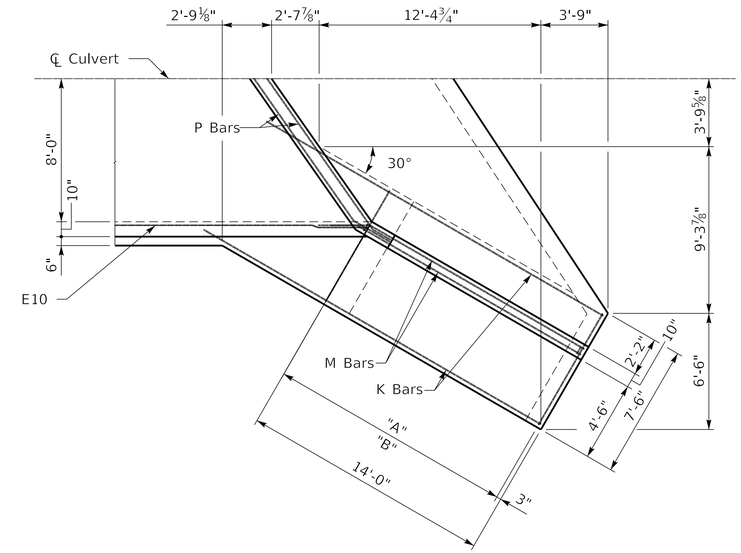

PLAN

SCALE = 1:48

"A" 34~H171 @ 5" = 13'-9" Top of Ftg.
"B" 34~H175 @ 5" = 13'-9" Bot of Ftg.
"C" G52~G81,4~G82 @ 5" = 13'-9" B.F.
"D" 34~D7 @ 5" = 13'-9" B.F.
"E" G142~G155 @ 1'-0" = 13'-0" F.F.
"F" 9~M187 @ 1'-0" = 8'-0" B.F.
"G" 9~M195 @ 1'-0" = 8'-0" F.F.
"H" 8~K179 @ 1'-0" = 7'-0" Bot of Ftg.
"I" 8~K179 @ 1'-0" = 7'-0" Top of Ftg.

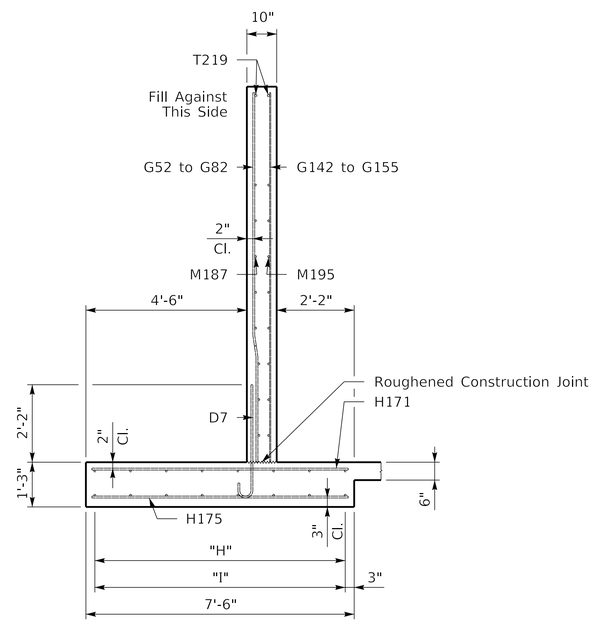

WING SECTION

SCALE = 1:24

COMMONWEALTH OF KENTUCKY DEPARTMENT OF HIGHWAYS	REVISION	DATE	PREPARED BY Division of Structural Design	DATE: FEB. 2023	CHECKED BY	*WING 3* CROSSING SCAFFOLD CREEK	ROUTE KY 915	ITEM NO. N/A	COUNTY OF CAMPBELL
				DESIGNED BY: J. VAN ZEE	S.T. ANDARDS			SHEET NO. S7	DRAWING NUMBER 28705
				DETAILED BY: M. BAWITHAWNG	J. VAN ZEE				

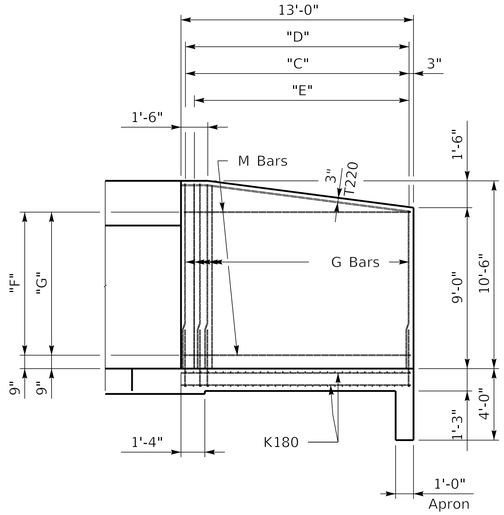

WING ELEVATION

SCALE = 1:48

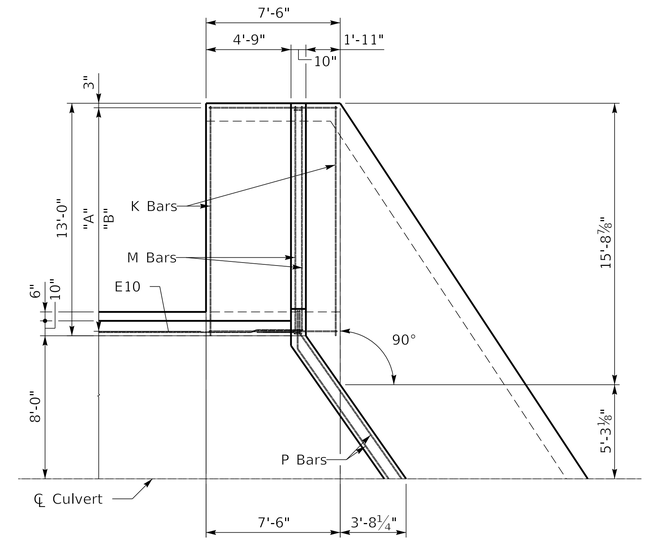

PLAN

SCALE = 1:48

"A" 31~H172 @ 5" = 12'-6" Top of Ftg.
"B" 31~H176 @ 5" = 12'-6" Bot of Ftg.
"C" 3~G111,G110~G83 @ 5" = 12'-6" B.F.
"D" 31~D8 @ 5" = 12'-6" B.F.
"E" G168~G156 @ 1'-0" = 12'-0" F.F.
"F" 9~M188 @ 1'-0" = 8'-0" B.F.
"G" 9~M196 @ 1'-0" = 8'-0" F.F.
"H" 8~K180 @ 1'-0" = 7'-0" Bot of Ftg.
"I" 8~K180 @ 1'-0" = 7'-0" Top of Ftg.

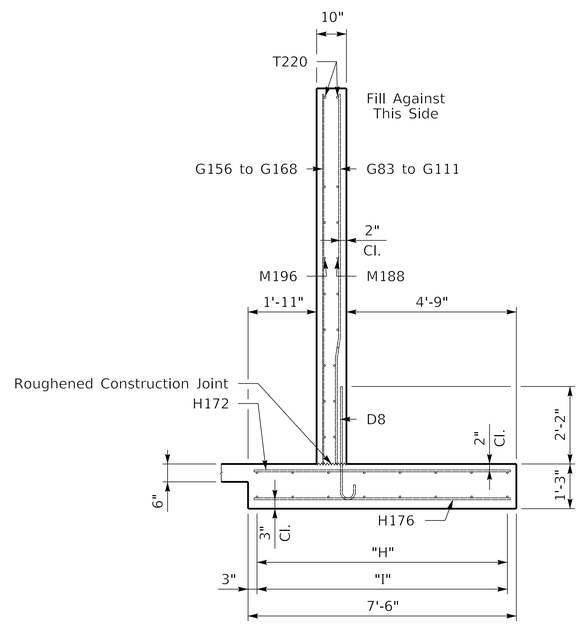

WING SECTION

SCALE = 1:24

COMMONWEALTH OF KENTUCKY
DEPARTMENT OF HIGHWAYS

KENTUCKY TRANSPORTATION CABINET

REVISION	DATE

PREPARED BY
Division of Structural Design

DATE: FEB. 2023	CHECKED BY
DESIGNED BY: J. VAN ZEE	S.T. ANDARDS
DETAILED BY: M. BAWITHAWNG	J. VAN ZEE

WING 4

CROSSING: SCAFFOLD CREEK

ROUTE	ITEM NO.	COUNTY OF
KY 915	N/A	CAMPBELL
	SHEET NO.	DRAWING NUMBER
	S8	28705

BILL OF REINFORCEMENT

MARK	TYPE	NO.	SIZE	LENGTH	LOCATION	A/E	B/F	C/G	D/H
A1e	1	73	8	23- 0	Top Slab	20- 5 7/8	1- 3	0- 8	21- 1 7/8
B2	1	73	8	24- 3	Bottom Slab	21- 8 5/8	1- 3	0- 8	22- 4 5/8
C3e	Str.	80	5	9- 1	Sidewalls				
D4	4	80	5	4- 0	Sidewalls	3- 1 1/2	0-10	0- 5	3- 4
D5	4	34	5	3-10	B.F. Wing 1	2-11 1/2	0-10	0- 5	3- 2
D6	4	26	5	3-10	B.F. Wing 2	2-11 1/2	0-10	0- 5	3- 2
D7	4	34	5	3-10	B.F. Wing 3	2-11 1/2	0-10	0- 5	3- 2
D8	4	31	5	3-10	B.F. Wing 4	2-11 1/2	0-10	0- 5	3- 2
E9e	Str.	68	5	39- 6	Top & Bottom Slabs				
E10	Str.	16	5	39- 8	Sidewalls				
G11	Str.	1	5	4-10	B.F Wing 1				
G12	Str.	1	5	5- 3	B.F Wing 1				
G13	Str.	1	5	5- 7	B.F Wing 1				
G14	Str.	1	5	5-11	B.F Wing 1				
G15	Str.	1	5	6- 3	B.F Wing 1				
G16	Str.	1	5	6- 8	B.F Wing 1				
G17	Str.	1	5	7- 0	B.F Wing 1				
G18	Str.	1	5	7- 4	B.F Wing 1				
G19	Str.	1	5	7- 8	B.F Wing 1				
G20	Str.	1	5	8- 1	B.F Wing 1				
G21	Str.	1	5	8- 5	B.F Wing 1				
G22	Str.	1	5	8- 9	B.F Wing 1				
G23	Str.	1	5	9- 2	B.F Wing 1				
G24	Str.	1	5	9- 6	B.F Wing 1				
G25	Str.	1	5	9-10	B.F Wing 1				
G26	Str.	1	5	10- 2	B.F Wing 1				
G27	Str.	1	5	10- 4	B.F Wing 1				
G28	Str.	1	5	8-10	B.F Wing 2				

BILL OF REINFORCEMENT

MARK	TYPE	NO.	SIZE	LENGTH	LOCATION	A/E	B/F	C/G	D/H
G29	Str.	1	5	8-11	B.F Wing 2				
G30	Str.	1	5	8-11	B.F Wing 2				
G31	Str.	1	5	9- 0	B.F Wing 2				
G32	Str.	1	5	9- 1	B.F Wing 2				
G33	Str.	1	5	9- 2	B.F Wing 2				
G34	Str.	1	5	9- 3	B.F Wing 2				
G35	Str.	1	5	9- 3	B.F Wing 2				
G36	Str.	1	5	9- 4	B.F Wing 2				
G37	Str.	1	5	9- 5	B.F Wing 2				
G38	Str.	1	5	9- 6	B.F Wing 2				
G39	Str.	1	5	9- 6	B.F Wing 2				
G40	Str.	1	5	9- 7	B.F Wing 2				
G41	Str.	1	5	9- 8	B.F Wing 2				
G42	Str.	1	5	9- 9	B.F Wing 2				
G43	Str.	1	5	9-10	B.F Wing 2				
G44	Str.	1	5	9-10	B.F Wing 2				
G45	Str.	1	5	9-11	B.F Wing 2				
G46	Str.	1	5	10- 0	B.F Wing 2				
G47	Str.	1	5	10- 1	B.F Wing 2				
G48	Str.	1	5	10- 2	B.F Wing 2				
G49	Str.	1	5	10- 2	B.F Wing 2				
G50	Str.	1	5	10- 3	B.F Wing 2				
G51	Str.	3	5	10- 4	B.F Wing 2				
G52	Str.	1	5	8-10	B.F Wing 3				
G53	Str.	1	5	8-10	B.F Wing 3				
G54	Str.	1	5	8-11	B.F Wing 3				
G55	Str.	1	5	9- 0	B.F Wing 3				
G56	Str.	1	5	9- 0	B.F Wing 3				
G57	Str.	1	5	9- 1	B.F Wing 3				
G58	Str.	1	5	9- 1	B.F Wing 3				
G59	Str.	1	5	9- 2	B.F Wing 3				
G60	Str.	1	5	9- 3	B.F Wing 3				
G61	Str.	1	5	9- 3	B.F Wing 3				
G62	Str.	1	5	9- 4	B.F Wing 3				
G63	Str.	1	5	9- 4	B.F Wing 3				
G64	Str.	1	5	9- 5	B.F Wing 3				
G65	Str.	1	5	9- 6	B.F Wing 3				
G66	Str.	1	5	9- 6	B.F Wing 3				
G67	Str.	1	5	9- 7	B.F Wing 3				
G68	Str.	1	5	9- 7	B.F Wing 3				
G69	Str.	1	5	9- 8	B.F Wing 3				
G70	Str.	1	5	9- 9	B.F Wing 3				
G71	Str.	1	5	9- 9	B.F Wing 3				
G72	Str.	1	5	9-10	B.F Wing 3				
G73	Str.	1	5	9-10	B.F Wing 3				
G74	Str.	1	5	9-11	B.F Wing 3				
G75	Str.	1	5	10- 0	B.F Wing 3				
G76	Str.	1	5	10- 0	B.F Wing 3				
G77	Str.	1	5	10- 1	B.F Wing 3				
G78	Str.	1	5	10- 1	B.F Wing 3				
G79	Str.	1	5	10- 2	B.F Wing 3				
G80	Str.	1	5	10- 3	B.F Wing 3				
G81	Str.	1	5	10- 3	B.F Wing 3				
G82	Str.	4	5	10- 4	B.F Wing 3				
G83	Str.	1	5	8-10	B.F Wing 4				
G84	Str.	1	5	8-11	B.F Wing 4				
G85	Str.	1	5	8-11	B.F Wing 4				
G86	Str.	1	5	9- 0	B.F Wing 4				
G87	Str.	1	5	9- 0	B.F Wing 4				
G88	Str.	1	5	9- 1	B.F Wing 4				
G89	Str.	1	5	9- 2	B.F Wing 4				
G90	Str.	1	5	9- 2	B.F Wing 4				
G91	Str.	1	5	9- 3	B.F Wing 4				
G92	Str.	1	5	9- 4	B.F Wing 4				
G93	Str.	1	5	9- 4	B.F Wing 4				
G94	Str.	1	5	9- 5	B.F Wing 4				
G95	Str.	1	5	9- 6	B.F Wing 4				
G96	Str.	1	5	9- 6	B.F Wing 4				
G97	Str.	1	5	9- 7	B.F Wing 4				
G98	Str.	1	5	9- 8	B.F Wing 4				
G99	Str.	1	5	9- 8	B.F Wing 4				
G100	Str.	1	5	9- 9	B.F Wing 4				
G101	Str.	1	5	9-10	B.F Wing 4				
G102	Str.	1	5	9-10	B.F Wing 4				

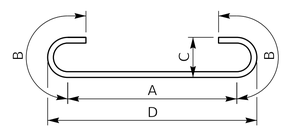

TYPE 1

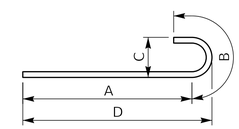

TYPE 4

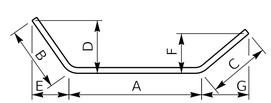

TYPE 7

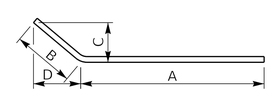

TYPE 8

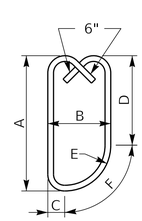

TYPE 11

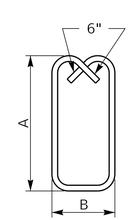

TYPE 12

COMMONWEALTH OF KENTUCKY
DEPARTMENT OF HIGHWAYS

KENTUCKY TRANSPORTATION CABINET

REVISION	DATE

PREPARED BY
Division of Structural Design

DATE: FEB. 2023	CHECKED BY
DESIGNED BY: J. VAN ZEE	S.T. ANDARDS
DETAILED BY: M. BAWITHAWNG	J. VAN ZEE

Bill of Reinforcement

CROSSING: SCAFFOLD CREEK

ROUTE: KY 915

ITEM NO.: N/A

SHEET NO.: S9

COUNTY OF: CAMPBELL

DRAWING NUMBER: 28705

BILL OF REINFORCEMENT

MARK	TYPE	NO.	SIZE	LENGTH	LOCATION	A/E	B/F	C/G	D/H
G103	Str.	1	5	9-11	B.F Wing 4				
G104	Str.	1	5	10- 0	B.F Wing 4				
G105	Str.	1	5	10- 0	B.F Wing 4				
G106	Str.	1	5	10- 1	B.F Wing 4				
G107	Str.	1	5	10- 2	B.F Wing 4				
G108	Str.	1	5	10- 2	B.F Wing 4				
G109	Str.	1	5	10- 3	B.F Wing 4				
G110	Str.	1	5	10- 3	B.F Wing 4				
G111	Str.	3	5	10- 4	B.F Wing 4				
G112	Str.	1	3	4-10	F.F. Wing 1				
G113	Str.	1	3	5- 3	F.F. Wing 1				
G114	Str.	1	3	5- 7	F.F. Wing 1				
G115	Str.	1	3	5-11	F.F. Wing 1				
G116	Str.	1	3	6- 3	F.F. Wing 1				
G117	Str.	1	3	6- 8	F.F. Wing 1				
G118	Str.	1	3	7- 0	F.F. Wing 1				
G119	Str.	1	3	7- 4	F.F. Wing 1				
G120	Str.	1	3	7- 8	F.F. Wing 1				
G121	Str.	1	3	8- 1	F.F. Wing 1				
G122	Str.	1	3	8- 5	F.F. Wing 1				
G123	Str.	1	3	8- 9	F.F. Wing 1				
G124	Str.	1	3	9- 2	F.F. Wing 1				
G125	Str.	1	3	9- 6	F.F. Wing 1				
G126	Str.	1	3	9-10	F.F. Wing 1				
G127	Str.	1	3	10- 2	F.F. Wing 1				
G128	Str.	1	3	10- 4	F.F. Wing 1				
G129	Str.	1	3	8-10	F.F. Wing 2				
G130	Str.	1	3	8-11	F.F. Wing 2				
G131	Str.	1	3	9- 1	F.F. Wing 2				
G132	Str.	1	3	9- 3	F.F. Wing 2				
G133	Str.	1	3	9- 4	F.F. Wing 2				
G134	Str.	1	3	9- 6	F.F. Wing 2				
G135	Str.	1	3	9- 7	F.F. Wing 2				
G136	Str.	1	3	9- 9	F.F. Wing 2				
G137	Str.	1	3	9-10	F.F. Wing 2				
G138	Str.	1	3	10- 0	F.F. Wing 2				
G139	Str.	1	3	10- 2	F.F. Wing 2				
G140	Str.	1	3	10- 3	F.F. Wing 2				
G141	Str.	1	3	10- 4	F.F. Wing 2				
G142	Str.	1	3	8-10	F.F. Wing 3				
G143	Str.	1	3	8-11	F.F. Wing 3				
G144	Str.	1	3	9- 1	F.F. Wing 3				
G145	Str.	1	3	9- 2	F.F. Wing 3				
G146	Str.	1	3	9- 4	F.F. Wing 3				
G147	Str.	1	3	9- 5	F.F. Wing 3				
G148	Str.	1	3	9- 6	F.F. Wing 3				
G149	Str.	1	3	9- 8	F.F. Wing 3				
G150	Str.	1	3	9- 9	F.F. Wing 3				
G151	Str.	1	3	9-11	F.F. Wing 3				
G152	Str.	1	3	10- 0	F.F. Wing 3				
G153	Str.	1	3	10- 2	F.F. Wing 3				
G154	Str.	1	3	10- 3	F.F. Wing 3				
G155	Str.	1	3	10- 4	F.F. Wing 3				
G156	Str.	1	3	8-10	F.F. Wing 4				
G157	Str.	1	3	8-11	F.F. Wing 4				
G158	Str.	1	3	9- 1	F.F. Wing 4				
G159	Str.	1	3	9- 3	F.F. Wing 4				
G160	Str.	1	3	9- 4	F.F. Wing 4				
G161	Str.	1	3	9- 6	F.F. Wing 4				
G162	Str.	1	3	9- 7	F.F. Wing 4				
G163	Str.	1	3	9- 9	F.F. Wing 4				
G164	Str.	1	3	9-10	F.F. Wing 4				
G165	Str.	1	3	10- 0	F.F. Wing 4				
G166	Str.	1	3	10- 2	F.F. Wing 4				
G167	Str.	1	3	10- 3	F.F. Wing 4				
G168	Str.	1	3	10- 4	F.F. Wing 4				
H169	Str.	34	5	6- 2	Top Ftg Wing 1				
H170	Str.	26	5	7- 2	Top Ftg Wing 2				
H171	Str.	34	5	7- 2	Top Ftg Wing 3				
H172	Str.	31	5	7- 2	Top Ftg Wing 4				
H173	Str.	34	5	6- 2	Bot Ftg Wing 1				
H174	Str.	26	5	7- 2	Bot Ftg Wing 2				
H175	Str.	34	5	7- 2	Bot Ftg Wing 3				
H176	Str.	31	5	7- 2	Bot Ftg Wing 4				

BILL OF REINFORCEMENT

MARK	TYPE	NO.	SIZE	LENGTH	LOCATION	A/E	B/F	C/G	D/H
K177	Str.	14	5	24- 2	Ftg Wing 1				
K178	Str.	16	5	12-10	Ftg Wing 2				
K179	Str.	16	5	21- 9	Ftg Wing 3				
K180	Str.	16	5	12-10	Ftg Wing 4				
M181	8	5	5	19- 7	B.F. Wing 1	17- 5 1/2	2- 2	1- 1	1-10 1/2
M182	8	1	5	17- 0	B.F. Wing 1	14-10 5/8	2- 2	1- 1	1-10 1/2
M183	8	1	5	14- 3	B.F. Wing 1	12- 0 3/4	2- 2	1- 1	1-10 1/2
M184	8	1	5	11- 5	B.F. Wing 1	9- 3	2- 2	1- 1	1-10 1/2
M185	8	1	5	8- 7	B.F. Wing 1	6- 5 1/8	2- 2	1- 1	1-10 1/2
M186	8	9	5	14- 8	B.F. Wing 2	12- 7 7/8	2- 2	2- 2	0- 0
M187	8	9	5	16- 7	B.F. Wing 3	14- 5 1/2	2- 2	1- 1	1-10 1/2
M188	8	9	5	14- 8	B.F. Wing 4	12- 7 7/8	2- 2	2- 2	0- 0
M189	8	5	5	19- 0	F.F. Wing 1	16- 9 7/8	2- 2	1- 1	1-10 1/2
M190	8	1	5	16- 5	F.F. Wing 1	14- 3	2- 2	1- 1	1-10 1/2
M191	8	1	5	13- 7	F.F. Wing 1	11- 5 1/4	2- 2	1- 1	1-10 1/2
M192	8	1	5	10- 9	F.F. Wing 1	8- 7 3/8	2- 2	1- 1	1-10 1/2
M193	8	1	5	7-11	F.F. Wing 1	5- 9 5/8	2- 2	1- 1	1-10 1/2
M194	8	9	5	14- 8	F.F. Wing 2	12- 7 7/8	2- 2	2- 2	0- 0
M195	8	9	5	16- 0	F.F. Wing 3	13- 9 7/8	2- 2	1- 1	1-10 1/2
M196	8	9	5	14- 8	F.F. Wing 4	12- 7 7/8	2- 2	2- 2	0- 0
P197e	7	1	5	23- 2	B.F. Parapet Lt. End	19- 4 3/4	1-11	1-10 7/8	0- 9 3/4
						1- 8 7/8	1- 1 1/8	1- 6 3/4	
P198e	7	1	5	23- 3	B.F. Parapet Lt. End	19- 1 3/8	2- 1 1/8	2- 0 1/2	0-10 5/8
						1-10 7/8	1- 2 1/8	1- 8 1/8	
P199e	7	1	9	23- 2	B.F. Parapet Lt. End	19- 3 7/8	1-11 1/2	1-11 3/8	0-10
						1- 9 3/8	1- 1 3/8	1- 7 1/8	
P200e	7	1	5	22- 9	F.F. Parapet Lt. End	19- 5 1/2	1- 7 7/8	1- 8	0- 8 3/8
						1- 6	0-11 1/2	1- 4 3/8	
P201e	7	1	5	22- 9	F.F. Parapet Lt. End	19- 8 7/8	1- 5 3/4	1- 6 3/8	0- 7 1/2
						1- 4	0-10 1/2	1- 3	
P202e	7	1	9	22- 9	F.F. Parapet Lt. End	19- 6 3/4	1- 7 1/2	1- 7 3/4	0- 8 1/4
						1- 5 5/8	0-11 3/8	1- 4 1/8	
P203e	7	1	5	23- 2	B.F. Parapet Rt. End	19- 4 3/4	1-11 1/4	1-10 7/8	0- 9 3/4
						1- 9	1- 1 1/8	1- 6 3/4	
P204e	7	1	5	23- 3	B.F. Parapet Rt. End	19- 1 3/8	2- 1 3/8	2- 0 1/2	0-10 3/4
						1-11	1- 2 1/8	1- 8 1/8	
P205e	7	1	9	23- 2	B.F. Parapet Rt. End	19- 3 7/8	1-11 3/4	1-11 7/8	0-10
						1- 9 5/8	1- 1 3/8	1- 7 1/8	
P206e	7	1	5	22- 9	F.F. Parapet Rt. End	19- 5 1/2	1- 8 1/8	1- 8	0- 8 1/2
						1- 6 1/4	0-11 1/2	1- 4 3/8	
P207e	7	1	5	22- 9	F.F. Parapet Rt. End	19- 8 7/8	1- 6	1- 6 3/8	0- 7 5/8
						1- 4 1/4	0-10 1/2	1- 3	
P208e	7	1	9	22- 9	F.F. Parapet Rt. End	19- 6 3/4	1- 7 5/8	1- 7 3/4	0- 8 3/8
						1- 5 7/8	0-11 3/8	1- 4 1/8	
P209	Str.	2	9	22- 5	Bottom Slab Lt. End				
P210	Str.	2	9	22- 5	Bottom Slab Rt. End				
Q211	7	1	9	55- 9	Appron Lt. End	43- 1 3/4	5-10 3/8	6-11 1/8	5- 3 3/8
						2- 6 3/8	5- 8 5/8	3-10 7/8	
Q212	7	1	9	56- 6	Appron Lt. End	43- 6 3/8	6- 0 7/8	7- 1 1/8	5- 5 5/8
						2- 7 1/2	5-10 3/8	4- 0 1/8	
Q213	7	1	9	53- 9	Appron Rt. End	40- 1 7/8	6-10 3/8	6-11	6- 1 5/8
						3- 0 7/8	5- 9 1/4	3- 9 5/8	
Q214	7	1	9	54- 6	Appron Rt. End	40- 6 1/2	7- 0 7/8	7- 1 1/8	6- 3 7/8
						3- 2	5-11 1/8	3-10 7/8	
R215e	11s	20	5	5-11	Parapet Wall (Left End)	2- 3 1/2	0- 9	0- 2 1/2	1- 9
						0- 6 1/2	0- 9 3/4		
R216e	12s	20	5	6- 1	Parapet Wall (Right End)	2- 3 1/2	0- 9		
T217	8	2	6	17- 9	Top of Wing 1	16- 3 3/4	1- 5 1/2	0- 5 7/8	1- 4 1/2
T218	8	2	6	12-11	Top of Wing 2	11- 5 3/8	1- 5 7/8	0- 2 1/4	1- 5 5/8
T219	8	2	6	13-11	Top of Wing 3	12- 5 1/4	1- 5 7/8	0- 2 1/8	1- 5 3/4
T220	8	2	6	12-11	Top of Wing 4	11- 5 3/8	1- 5 7/8	0- 2 1/4	1- 5 5/8

COMMONWEALTH OF KENTUCKY
DEPARTMENT OF HIGHWAYS

KENTUCKY TRANSPORTATION CABINET

REVISION	DATE

PREPARED BY
Division of Structural Design

DATE: FEB. 2023	CHECKED BY
DESIGNED BY: J. VAN ZEE	S.T. ANDARDS
DETAILED BY: M. BAWITHAWNG	J. VAN ZEE

Bill of Reinforcement

CROSSING: SCAFFOLD CREEK

ROUTE: KY 915

ITEM NO.: N/A

SHEET NO.: S10

COUNTY OF: CAMPBELL

DRAWING NUMBER: 28705

SUBSURFACE DATA

Plan Scale 1" = 10'

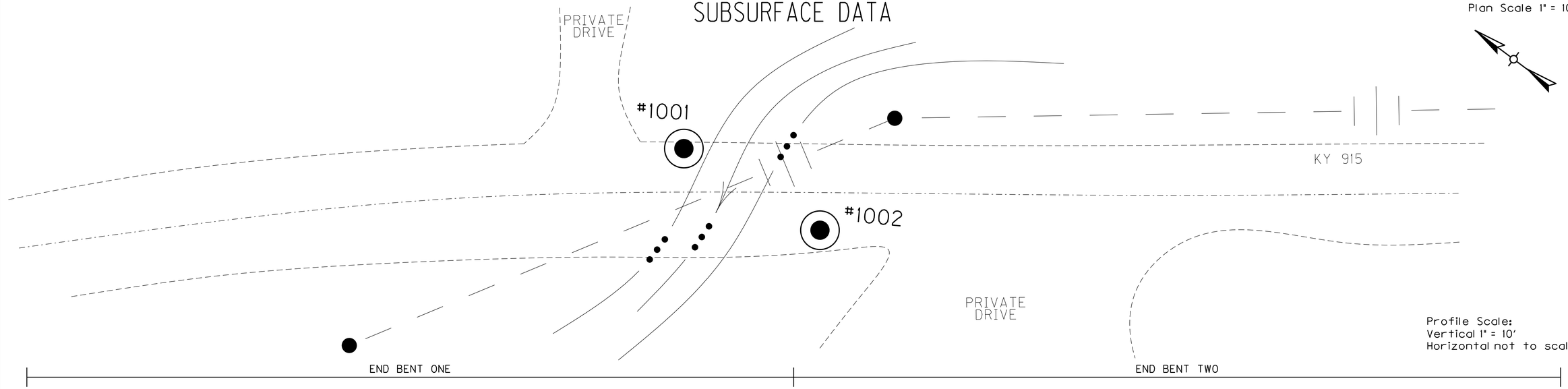

Profile Scale:
Vertical 1" = 10'
Horizontal not to scale

Hole No.	1001	1002
Lat./Long.	38.949010, -84.410830	38.948920, -84.410820
Elev. (NAVD 88 datum)	611.00	612.10

620 610 600 590 580 570 560

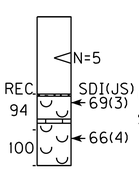

KYRQD	REC.	SDI(JS)
0	94	69(3)
11	100	66(4)

Cored Overburden: limestone boulders & cobbles

Shale & Limestone:(90%) light gray, clay to silt, calcareous, fossiliferous w/Limestone (10%) light gray, very fine grained

Top of rock elev.= 599.90
Base of weathered rock elev.= 599.40

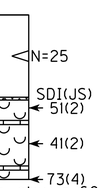

KYRQD	REC.	SDI(JS)
0	96	51(2)
0	82	41(2)
0	100	73(4)

Cored Overburden: weathered clay

Shale & Limestone:(90%) light gray to dark gray, clay to coarse, calcareous w/Limestone (10%) light gray, very fine to fine grained, (bed dipping 25° to 40° from 12.2' to 21.5')

Top of rock elev.= 600.20
No weathered rock

Datum

COMMONWEALTH OF KENTUCKY
DEPARTMENT OF HIGHWAYS

KENTUCKY TRANSPORTATION CABINET

REVISION	DATE

PREPARED BY
Division of Structural Design

DATE: 18-August-2023	CHECKED BY
DESIGNED BY:	
DETAILED BY: E. BAILEY	T. SHEFFIELD

Subsurface Data

CROSSING: SCAFFOLD CREEK

ROUTE	ITEM NO.	COUNTY OF
KY 915	N/A	CAMPBELL
	SHEET NO. S11	DRAWING NUMBER SA-001-2023